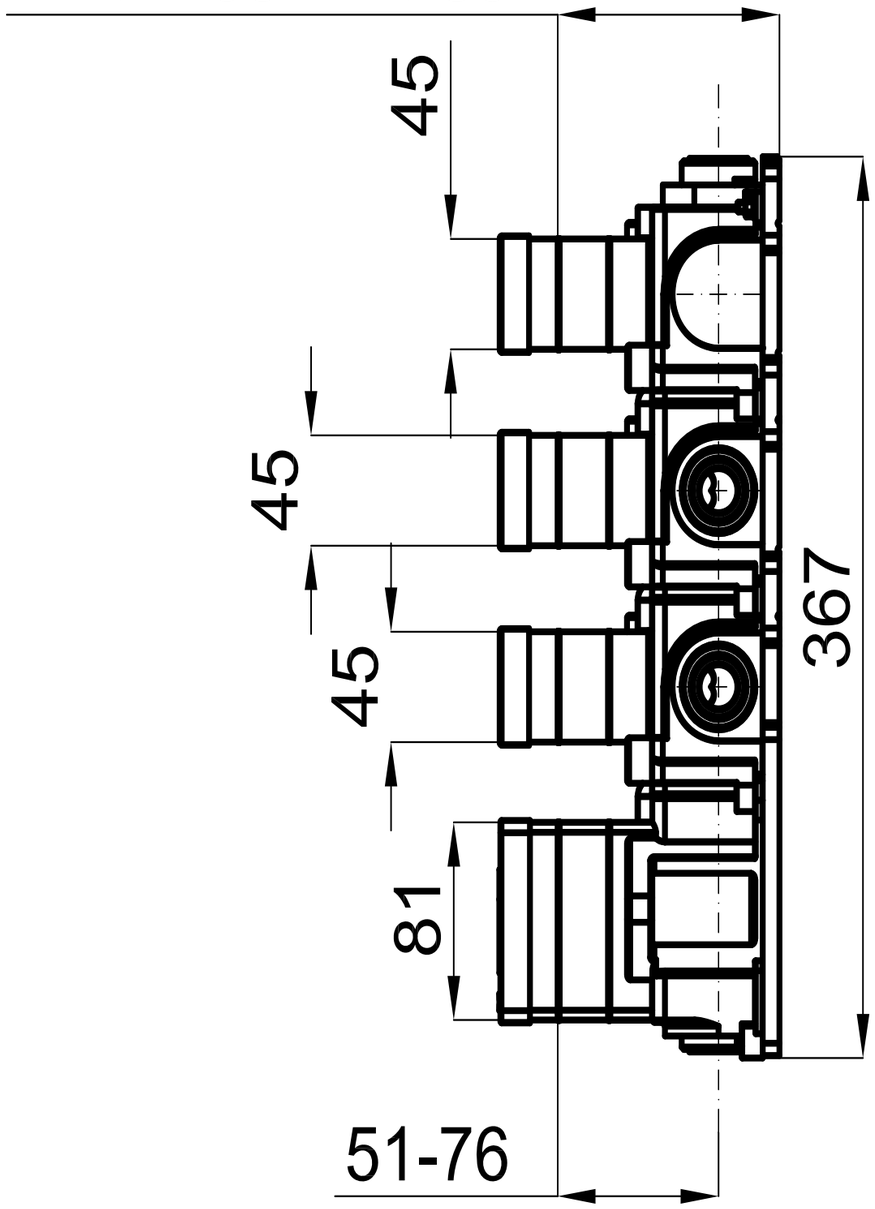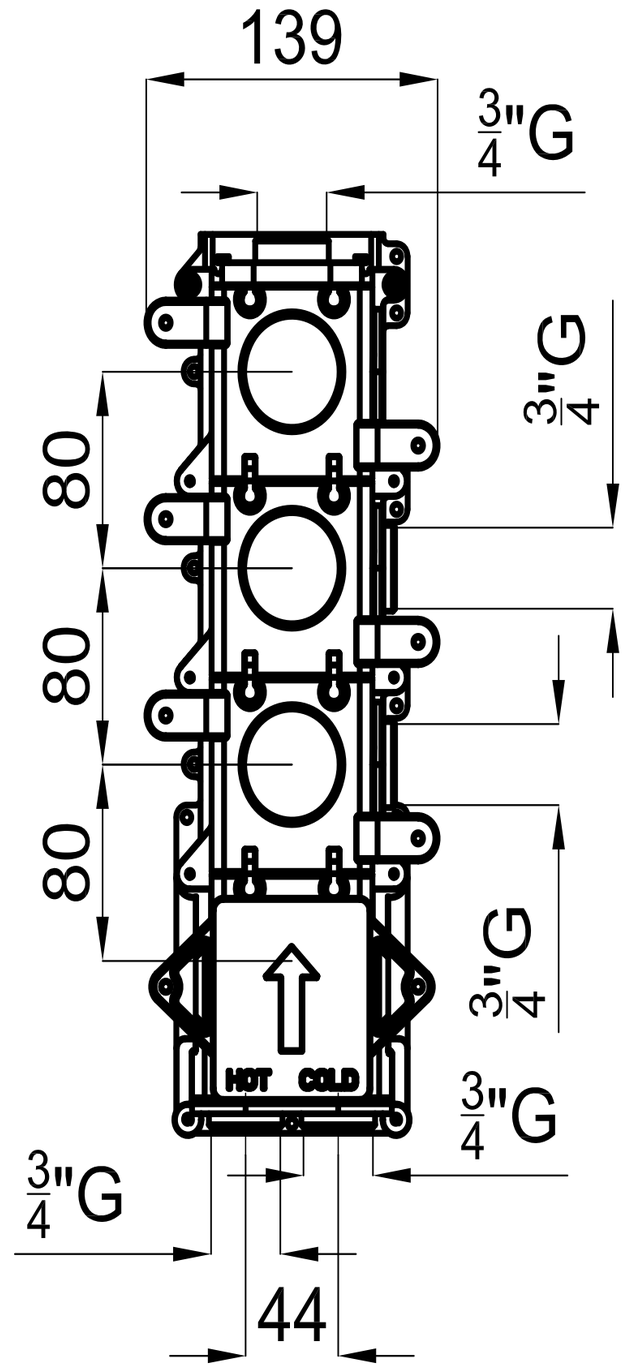MAX 105-MIN 80